## 10 YEAR MANUFACTURER'S LIMITED WARRANTY

All parts of this Elements of Design faucet are warranted to the original retail purchaser to be free from defects in material and workmanship for a period of Ten(10) years from the date of purchase as shown on the purchaser's receipt.
This warranty is limited to defective parts only, labor charges and/or damage resulting from improper installation, repair or replacements, as well as incidental and consequential damages connected therewith are excluded.
Any damage to this faucet as a result of misuse, abuse, neglect, accident,or improper installation or any use not consistent with the instructions furnished by us, will void this warranty. Replacement parts can be obtained from your local dealer. Freight cost is not covered by manufacturer.

## CAUTION!!!

1. Water lines must be completely flushed before use, to avoid debris & clogs in your water system leading to reduction of water flow and mal-functioning.
2. Warranty is void if water lines are not flushed prior to use and installation of the new faucet.
3. Use of abrasives of any strength may damage the finish of the faucet and void the product warranty.
4. Do not over tighten your faucet on the countertop during installation. The valve assembly is tested to meet the standards set by ASME A112.18.1 sec 5.8 which is listed at 100 LBF. However, over-tightened or over-torqued nuts may lead to cracks on the valve and will eventually lead to leaking and water damage.
5. Before installation of the faucet to the desired fixture, you need to secure and anchor your console, sink, tub, or vanity cabinet firmly to the wall and to the floor. To ensure your fixture or faucet mounting surface cannot be moved, before installation of the faucet, please test to see if the cabinet or vanity can be moved by hand or body weight. If the faucet mounting fixture is not secure and anchored, it will eventually crack the valve and cause leaking leading to property damage. In order to avoid this, be sure to secure your installation surface. Do not use any Power Tools for assembly and installation which can cause internal fractures to the fixture.

## PROBLEMS SHOOTING

| PROBLEM | CAUSE | CORRECTIVE ACTION |
|---|---|---|
| Leaks underneath handle | Bonnet nut has come loose | Remove the handle and tighten the bonnet nut |
| Leaks from the spout | Valve seat and spring are worn | Replace the valve seat and spring |
| Inconsistent water flow pattern | Aerator is dirty or aged | Release aerator and check on rubber gasket if aged or replace with a new aerator |
| Faucet is dirty | Caused by stubborn water spot | Clean with mild soap and warm water as often as possible |
| Handles work backward | Handle installed backward | Rotate the right stem stop assembly 180 degrees |

CODE APPROVAL: LA#M-000018

Elements Of Design

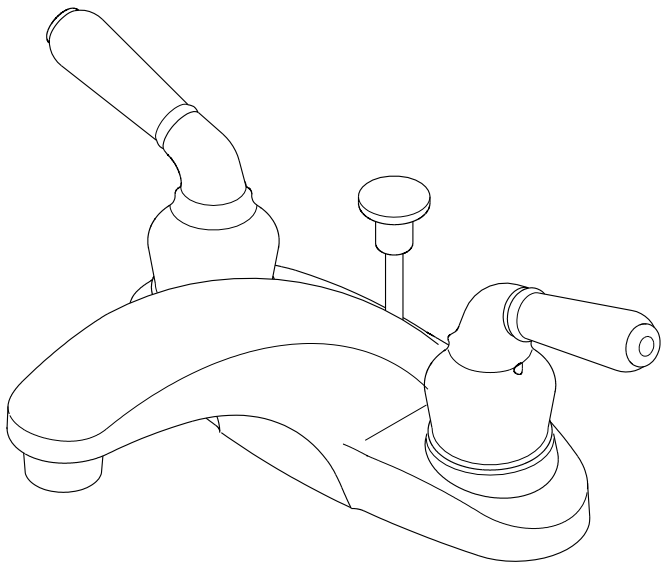

## Parts:

| Lock Nut | Cone Washer & Coupling Nut | Pop-Up |
|---|---|---|
| 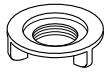 | 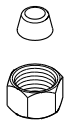 | 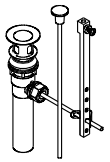 |
| 2 Pcs | 2 Pcs | 1 Pc |

www.eodfaucet.com
TOLL-FREE CUSTOMER SERVICE: 877-FAUCET-1(328-2381)
TECHNICAL SUPPORT E-mail: info@eodfaucet.com
12775 Reservoir St., Chino, CA 91710

Elements Of Design

# INSTALLATION INSTRUCTIONS
## For Use With EOD's Twin Handles Lavatory Faucet with or without Pop-Up

BEFORE BEGINNING INSTALLATION

1. Flush plumbing lines to clear any debris.
2. Shut off both supply lines after flushing.

1

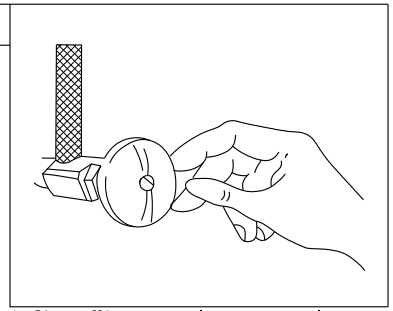

1. Shut off hot and cold water supply under sink. Plug sink drain with cloth to avoid losing small parts. Remove old faucet.

2

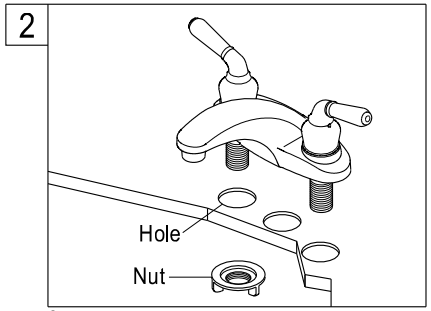


2. Insert the inlet shanks through the sink holes, and press down. Assemble the washers and locknuts on the inlet shanks, and then tighten the nuts by hand.

3

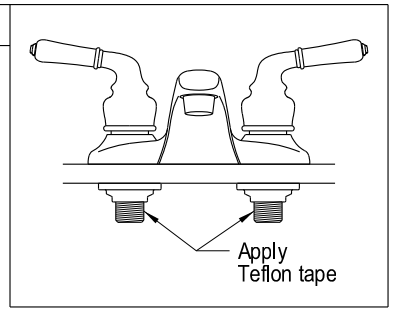


3. Apply Teflon tape to inlet shanks and connect supply lines.

4

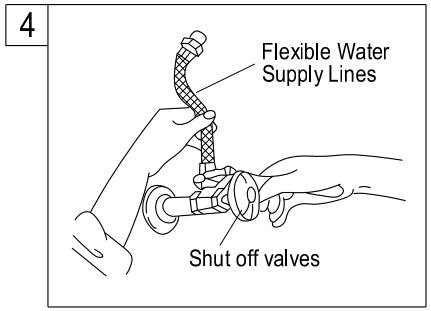


4. Apply Teflon tape to threads on faucet shank and shut off valves, connect water supply line.

5

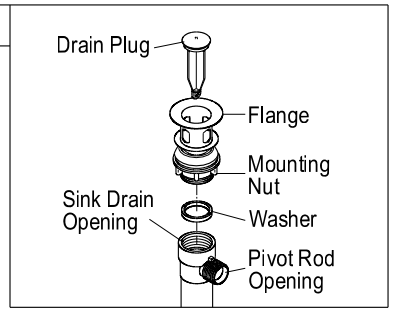


5. Install flange body up through the drain opening, hold the drain flange body in position with pivot rod opening facing the back of sink and hand tighten the mounting nut.

6

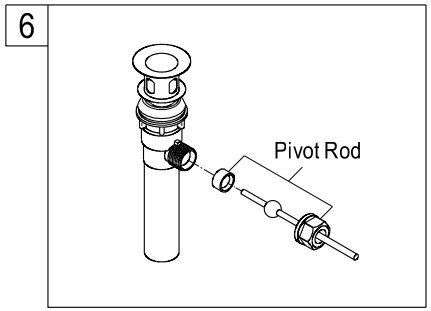


6. Place pivot rod into pivot rod opening. Slide pivot nut over pivot rod and thread it on the drain body. Tighten firmly.

Need Tools:

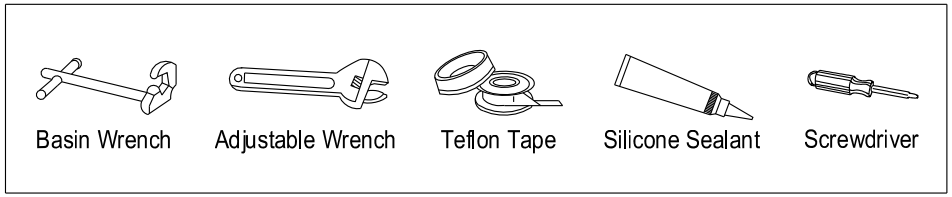


7

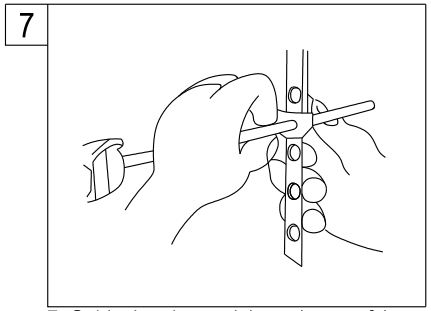

7. Guide the pivot rod through one of the holes on the lift rod strap and secure it with the spring clip. Then adjust the height of the lift rod by resetting the clevis screw.

8

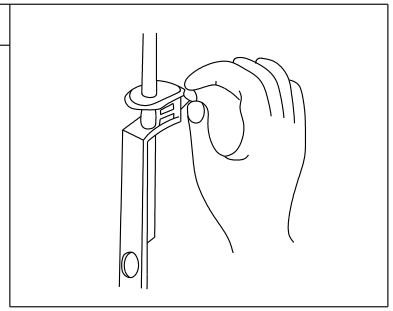

8. With lift rod in position on the faucet, insert lift rod through lift rod strap and secure with the clevis screw.

9

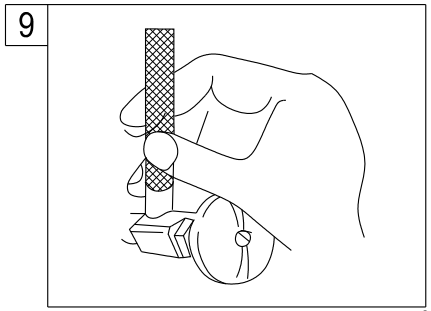

9. Turn on water supply valves and check for leaks, especially all supply line connections.

10

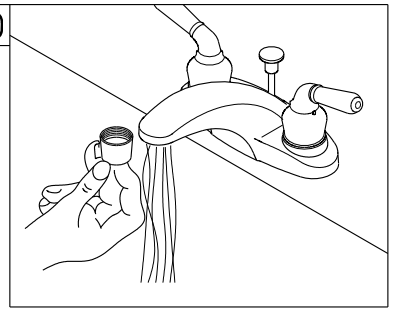

10. Remove aerator and turn on both hot and cold valves, let water run for at least one minute, this will clear any debris left in the line, reinstall aerator.

**Warning!!!**

- Do not over-tighten nut during installation.
- Over-tighten may crack the valve and cause severe leak.

©2016-08-L Elements Of Design

## Parts:

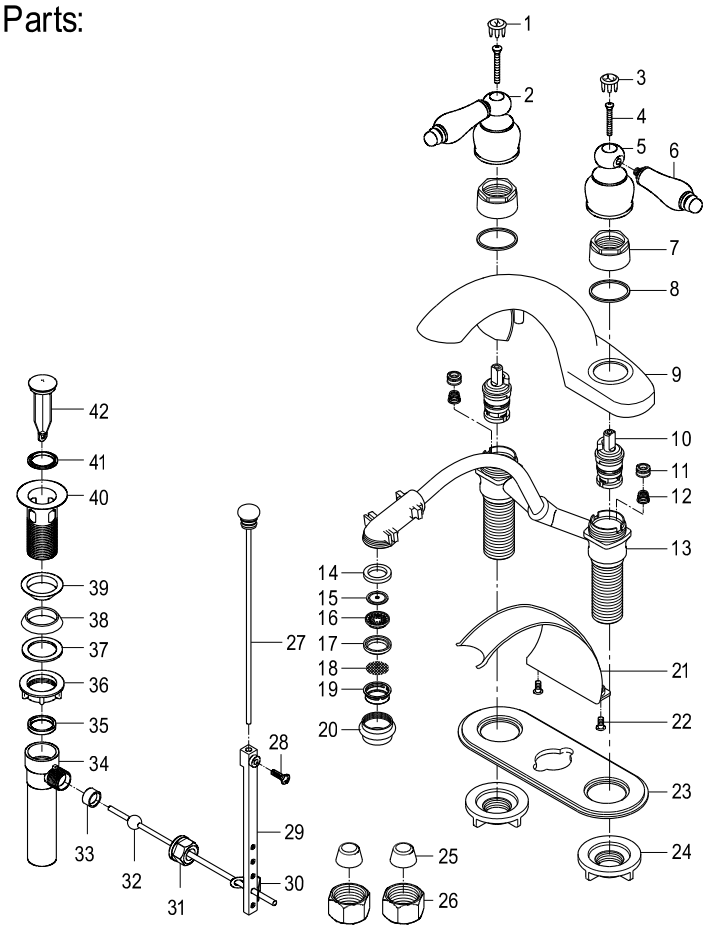


Replacement Parts:

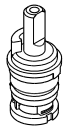

Cartridge: KBRP101C

Hot Handle: KBH601PLH

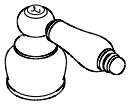

Cold Handle: KBH601PLC

## CARE AND MAINTENANCE OF YOUR FAUCET

Your Elements of Design faucet has been finished to the most strict standards; however, due to the high content of minerals in the water, your finish may appear dull and tarnished after time.
These are some do's and don'ts to maintain the luster on your faucet for many years to come.

DO
1. Use a silicon based caulking when installing.
2. Clean your faucet with only a mild soap and water solution.
3. Dry your faucet after using it.
4. Give it a coat of Carnauba Wax periodically.

DON'T
1. Use plumbers putty when installing the faucet.
2. Use any abrasive cleaning agents.

It may seem like a very simple and short list but it is that simple to maintain your faucet, looking shiny and new.

If your faucet is already looking somewhat dull and tarnished, before replacing it, try cleaning it with a 50/50 solution of vinegar and water, you may need to soak some rags and wrap around those stubborn areas, leave overnight and rinse completely in the morning, apply Carnauba wax once you have removed the mineral deposits.

## Elements of Design Faucets

(10) YEARS LIMITED WARRANTY

Elements of Design warrants its faucets to be flawless during normal residential use.If the faucet should leak or drip during normal use, Elements of Design will, free of charge, mail to the original owner the cartridge necessary to put the faucet in good working condition.All warranty parts to be shipped freight prepaid ground service.Customer will be responsible for all warranty part freight charges if express shipping is requested. This warranty applies only to Elements of Design Faucets installed in the United States of America only.

Elements of Design also warrants all other aspects of the faucet or accessories (except Oil Rubbed Bronze and Dark Bronze Finishes on color changes as part of the normal living finish behavior) to be free of defects in material and workmanship during normal residential use within (10) years from the date of purchase to its original owner. If a defect is found in normal residential use, Elements of Design will, at its selection, repair, provide a replacement part or product, or make appropriate adjustment. Damage to a product caused by accident, misuse, or abuse is not covered by this warranty. Improper care and cleaning will void the warranty. Proof of purchase (original sales receipt) must be provided to Elements of Design with all warranty claims. Elements of Design is not responsible for labor charges, installation, or other incidental or consequential costs. In no event shall the liability of Elements of Design exceed the purchase price of the faucet.

### SPECIAL FINISHES:

Warranty does not apply to special or living surface finishes such as Oil Rubbed Bronze, Dark or Old Bronze as living finishes will change over time as a result of a normal process and may look different than at the time of purchase, therefore these items are warranted for functionality only.Oil Rubbed Bronze, Dark or Old Bronze components may vary in shade at the time of shipment.This warranty is limited to the replacement of defective parts only, labor charges and/or damage resulting from improper installation, repair or replacements, as well as incidental and consequential damages connected therewith are excluded.
Any damage to this faucet as a result of misuse, abuse, neglect, accident or improper installation or any use not consistent with the instructions furnished by us, will void this warranty.

### CAUTION!!!

1. Prior to installing the faucet, water lines must be flushed clean of debris and particles that may be present to avoid the clogging of cartridges or aerator causing mal-function, leakage or reduce in flow.
2. Warranty will be void if water lines are not properly flushed prior to installing the faucet.
3. Use of abrasives cleaners of any strength may damage the finish of your faucet and will void this warranty. To obtain warranty service, contact the Dealer, Plumbing Contractor, Home Center or E-tailer, or contact Elements of Design by calling 1-909-465-6687 or write to Attn: Warranty Department, 12775 Reservoir St., Chino, CA 91710.

## Elements of Design Cast Iron Tubs, Acrylic Tubs, Toilets, Vessel Sinks, Wash Basins, and Stainless Steel Sinks.

ONE-YEAR LIMITED WARRANTY

Elements of Design Sinks, tubs and toilets are warranted to be free of defects in material and workmanship for one year from date of installation.Elements of Design will, at its selection, repair, replace or make appropriate adjustment where Elements of Design inspection discloses any such defects occurring in normal usage within one(1) year after purchase to its original owner. Proof of purchase (original sales receipt) must be provided to Elements of Design with all warranty claims. Elements of Design is not responsible for removal or installation costs.Use of in-tank toilet cleaners will void the warranty.

To obtain warranty service, contact the Dealer, Plumbing Contractor, Home Center or E-tailer, or contact Elements of Design by calling 1-909-465-6687 or write to Attn: Warranty Department, 12775 Reservoir St., Chino, CA 91710.
Some states/provinces do not allow limitations on how long an implied warranty lasts, or the exclusion or limitation of special, incidental or consequential damages, so these limitations and exclusions may not apply to you. This warranty gives you specific legal rights. You may also have other rights which vary from state/province to state/province.

* Never use cleaners containing abrasive cleansers, ammonia, bleach, acids, waxes, alcohol, solvents or other products not recommended for chrome. This will void the warranty.