DT0921PL,DT0912,5,8PL
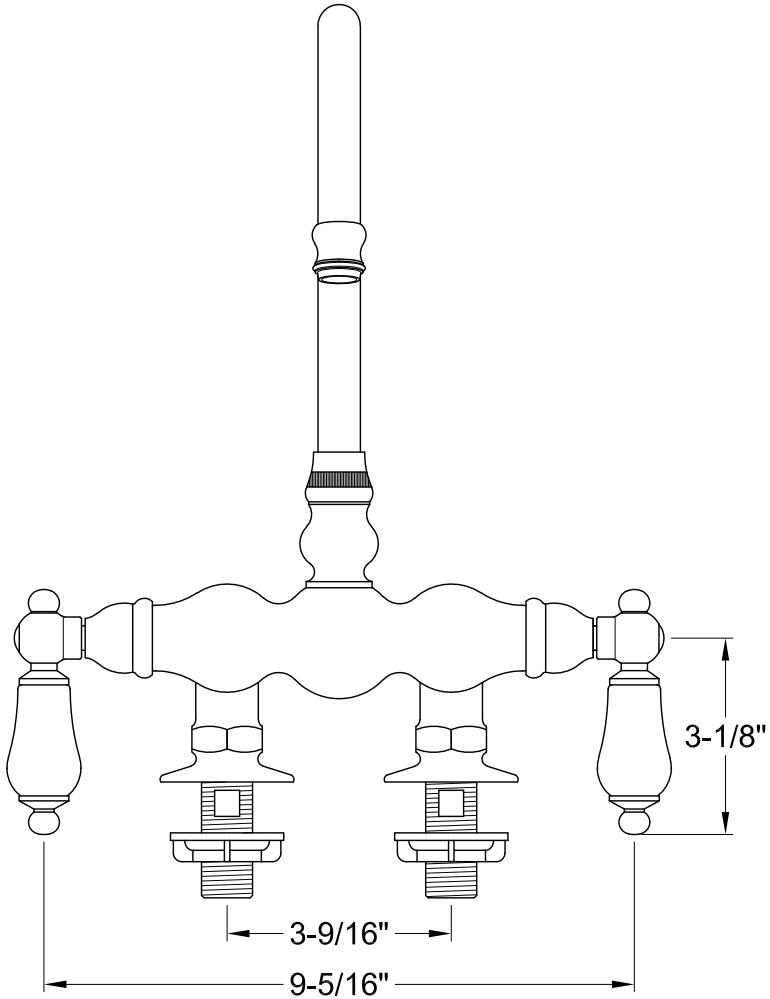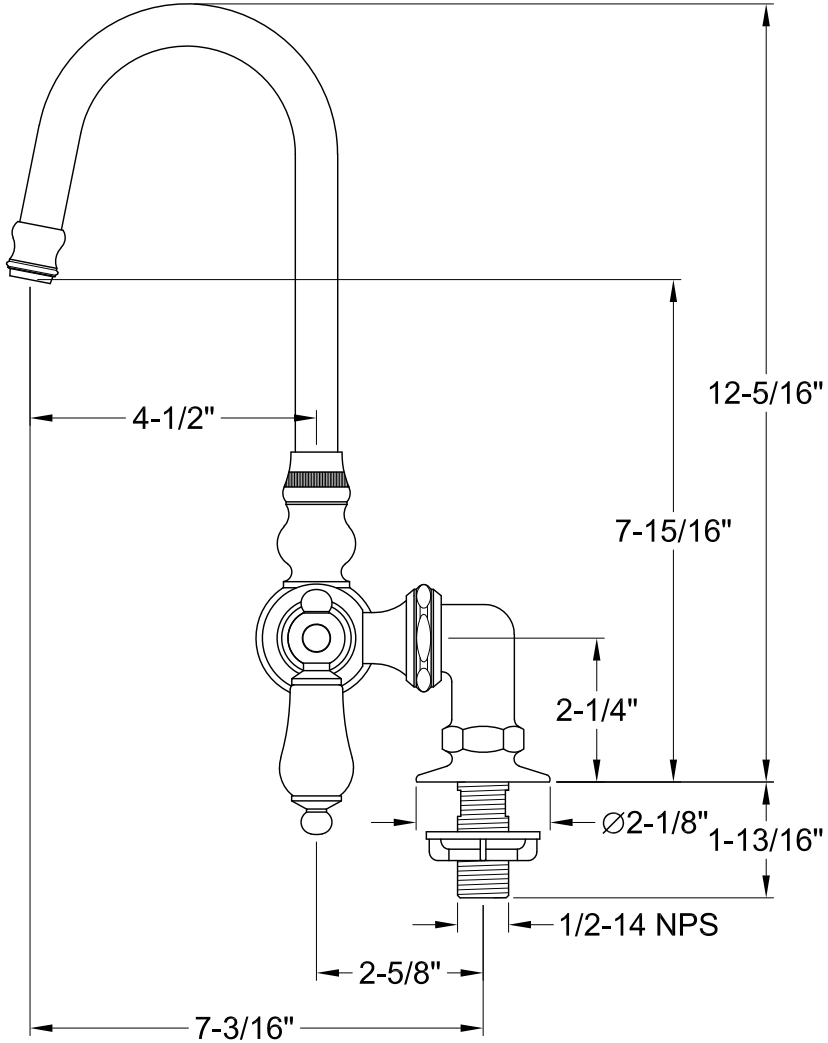
Deck Mount Tub Filler