DT0921AL,DT0912,5,8AL
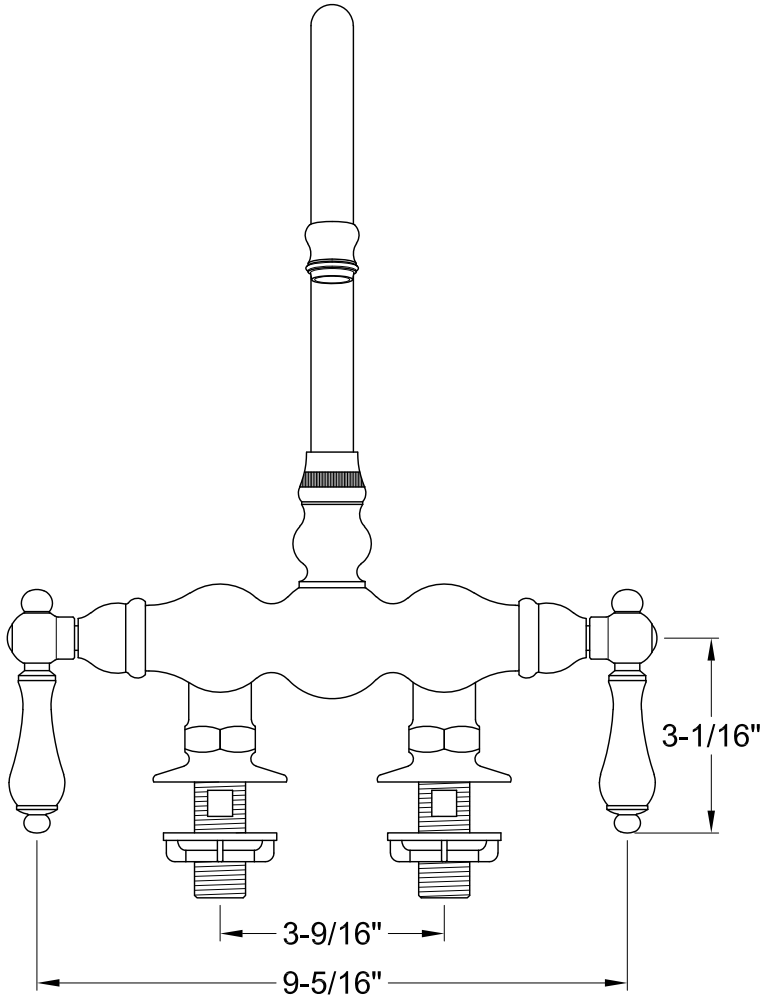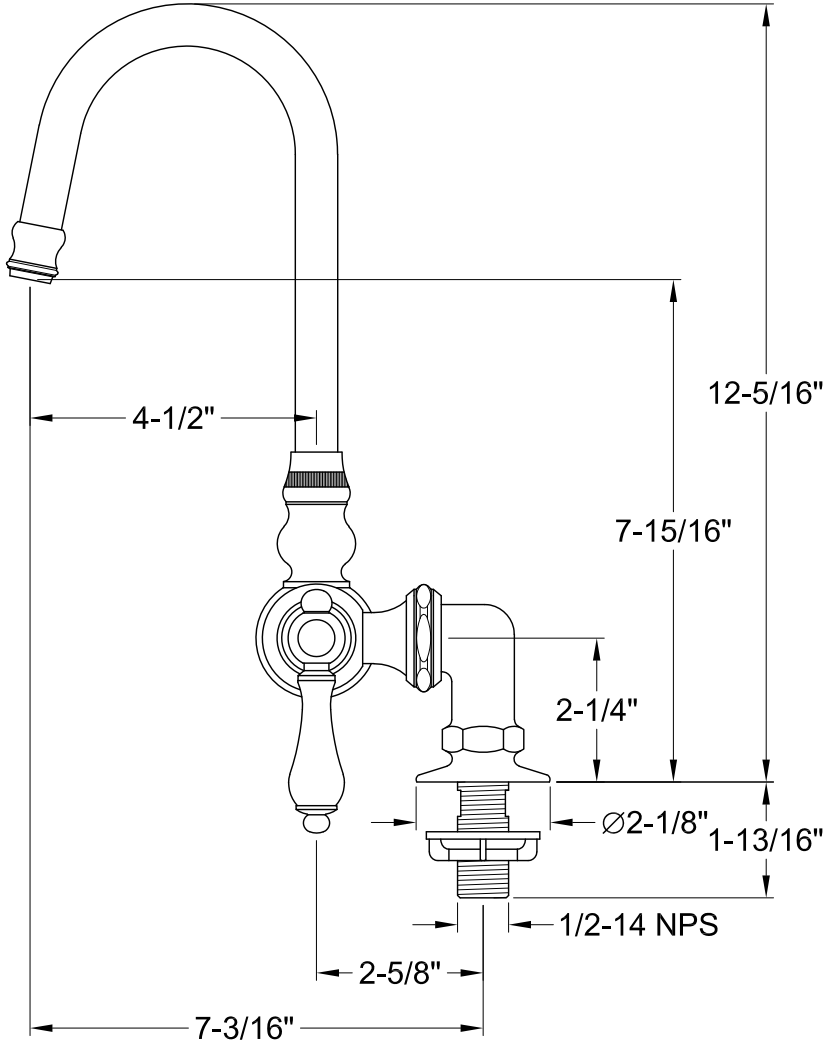
Deck Mount Tub Filler