DT0921CL,DT0912,5,8CL
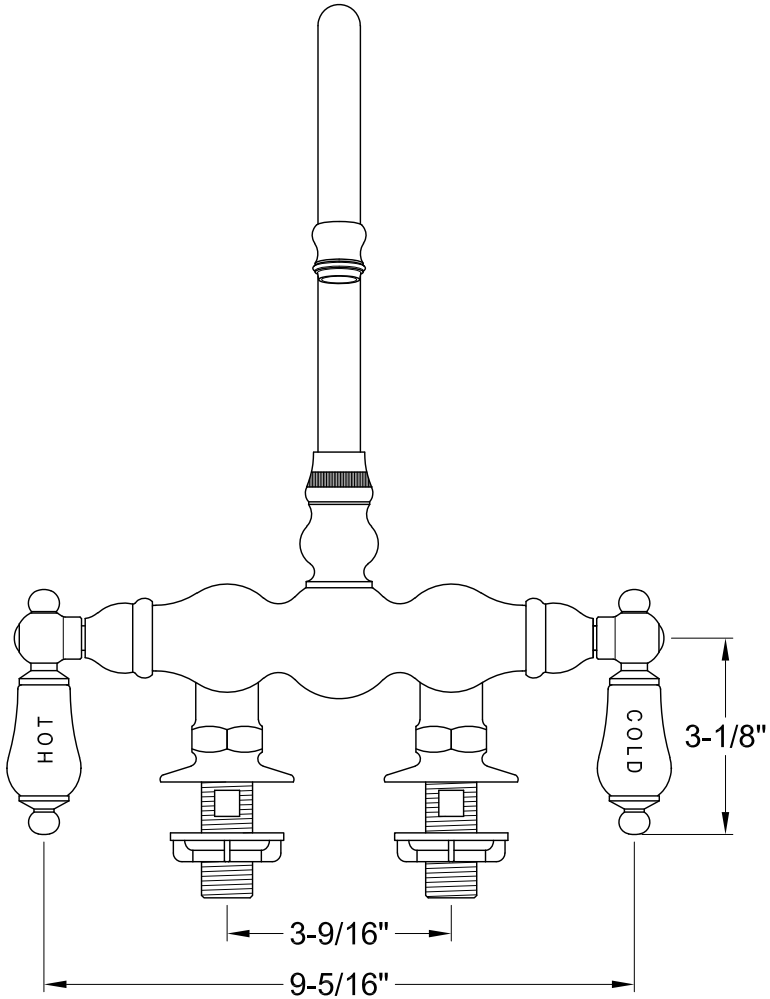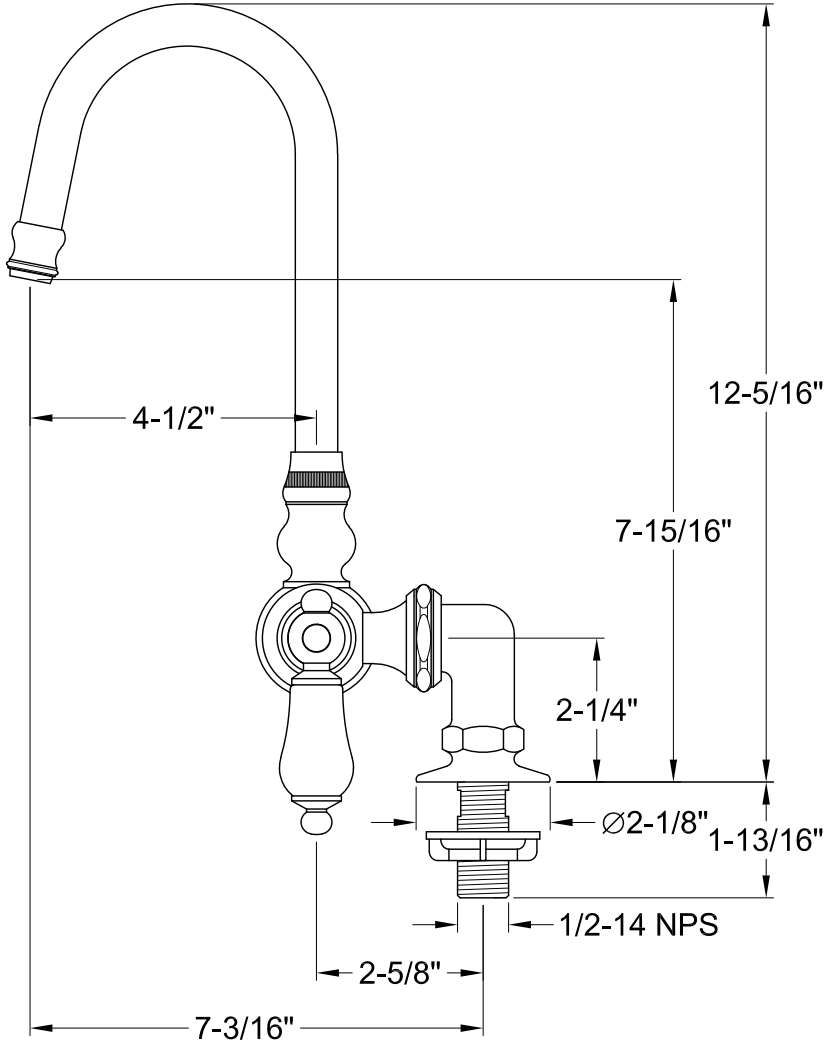
Deck Mount Tub Filler