DT10921CL,DT10912,5,8CL
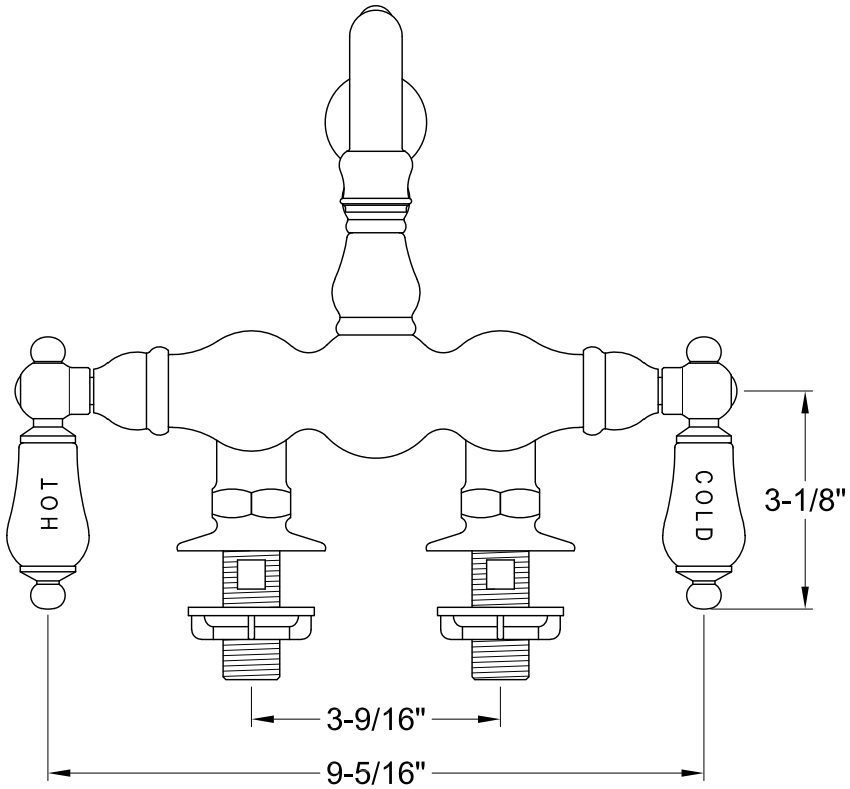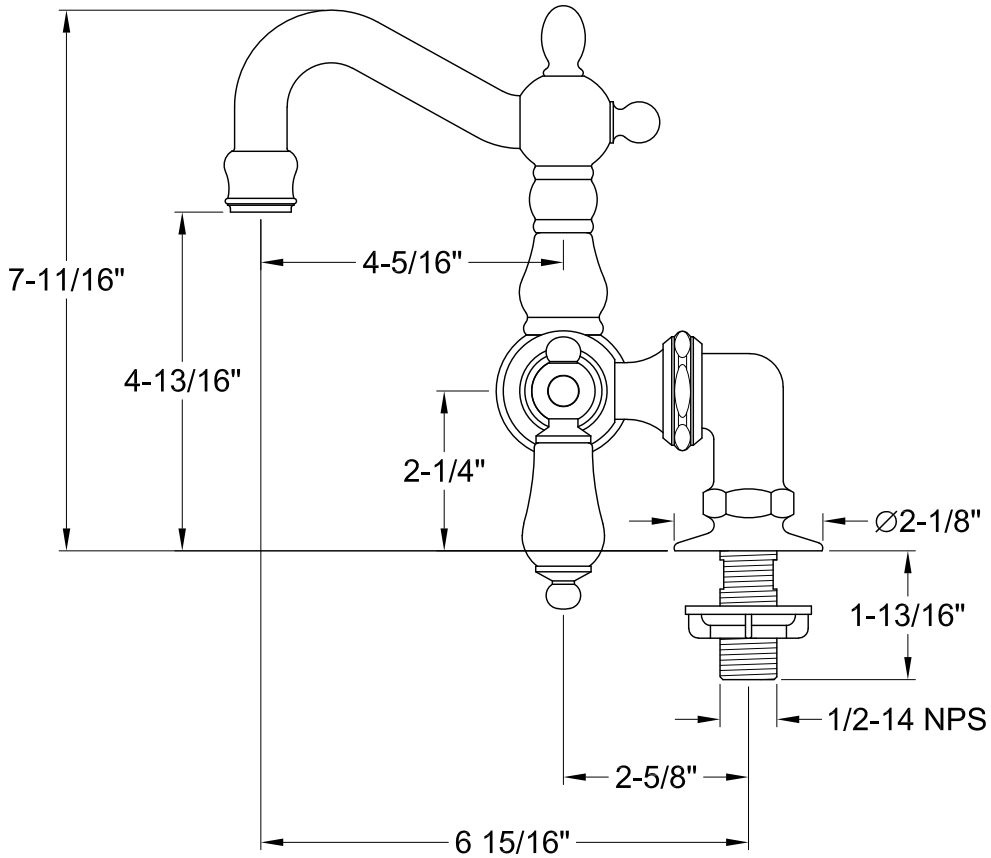
Deck Mount Tub Filler