EB1481,2,5,8PL
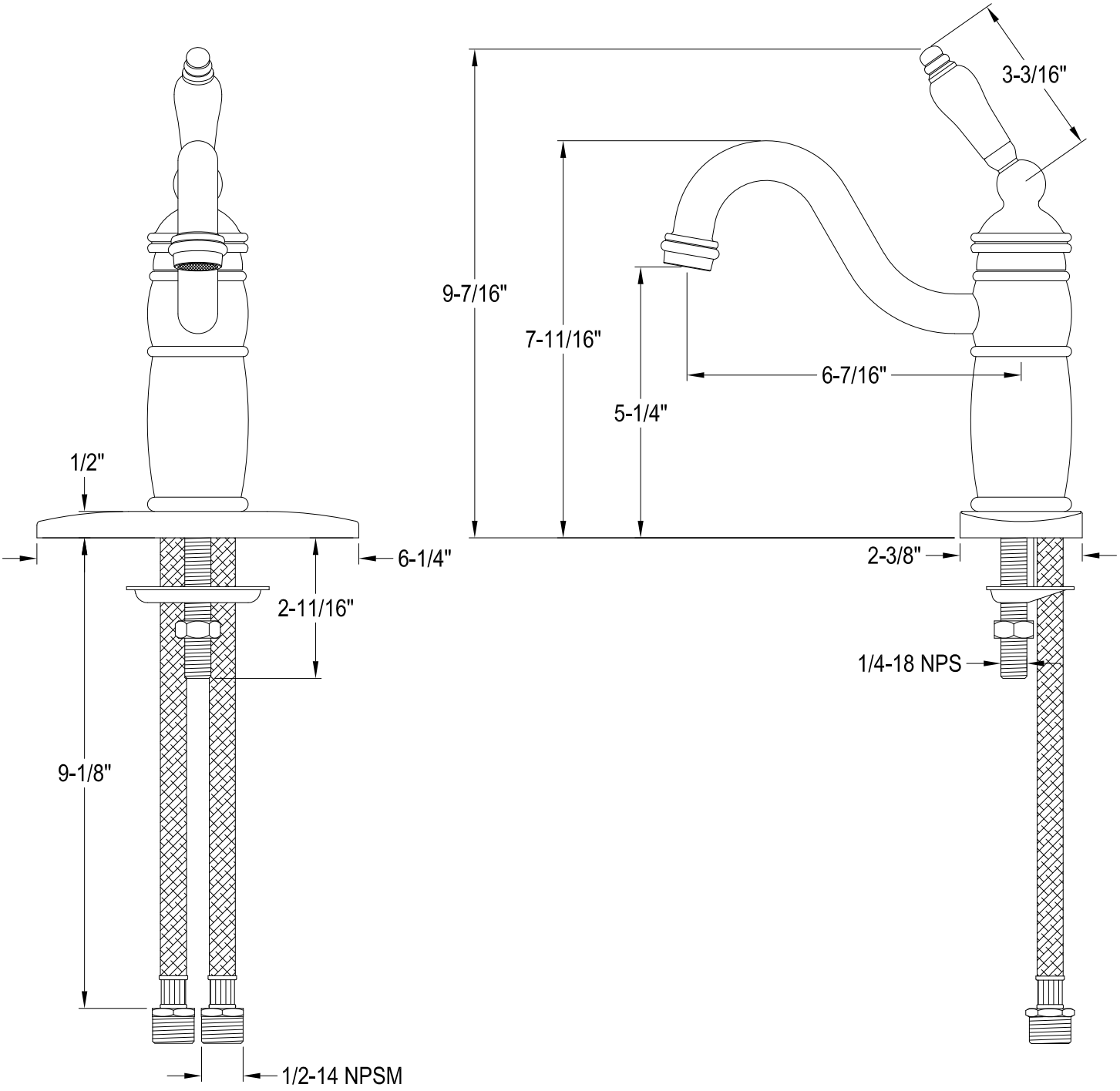
Single Handle Bar Faucet