EB3601,2,4,5,7,8,9BL
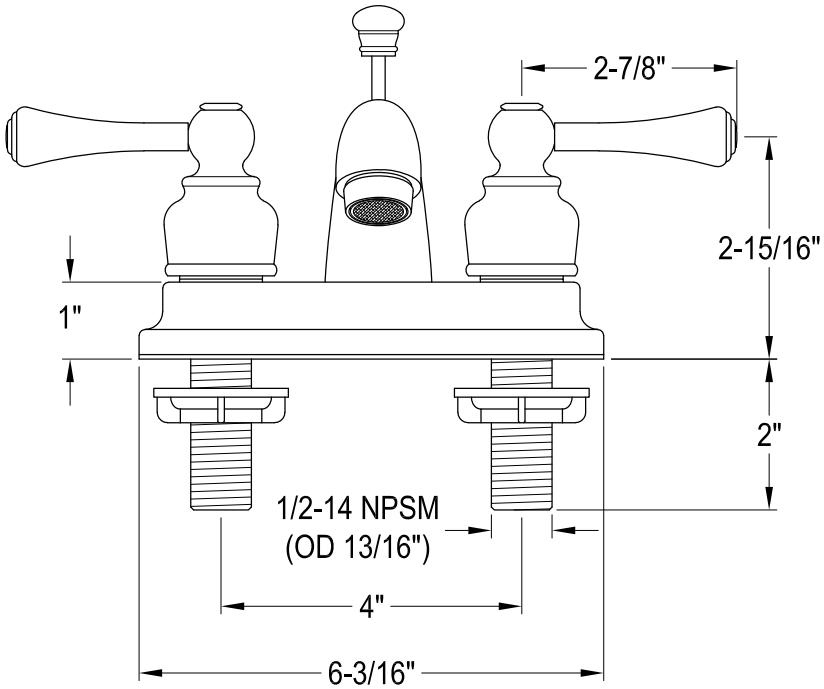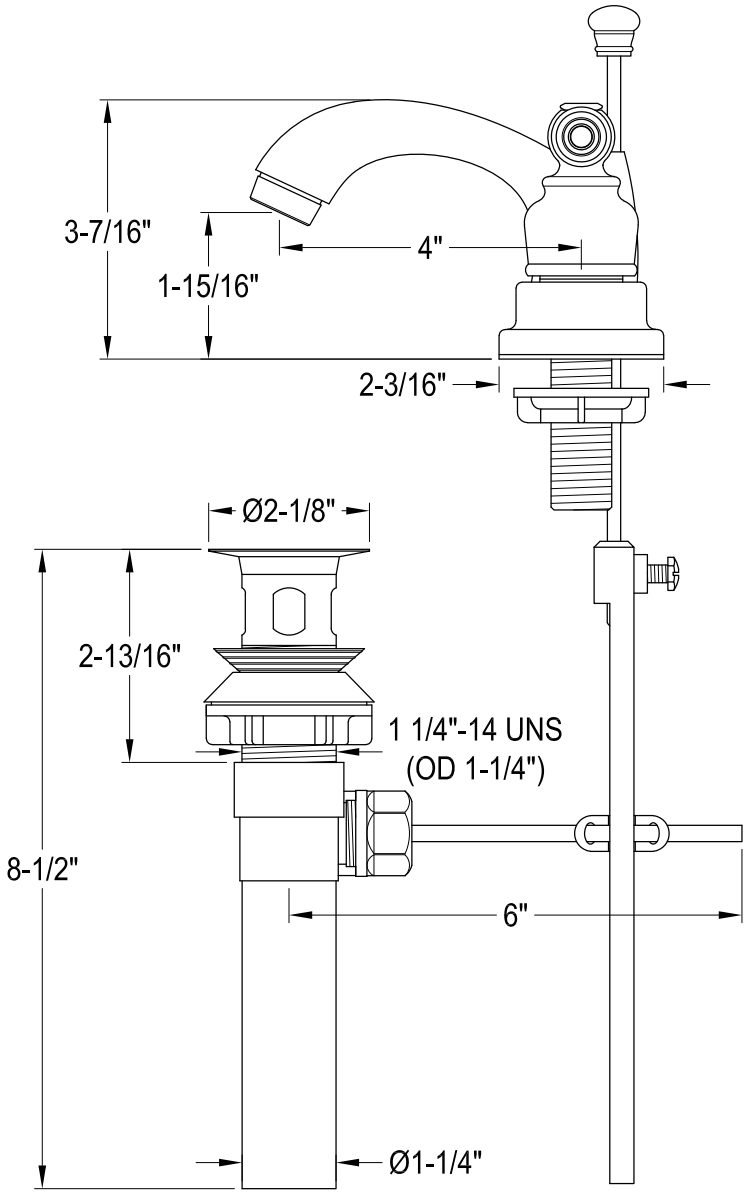
Twin Handles 4" Centerset Lavatory Faucet with Retail Pop-Up