EDTT2161,2,8
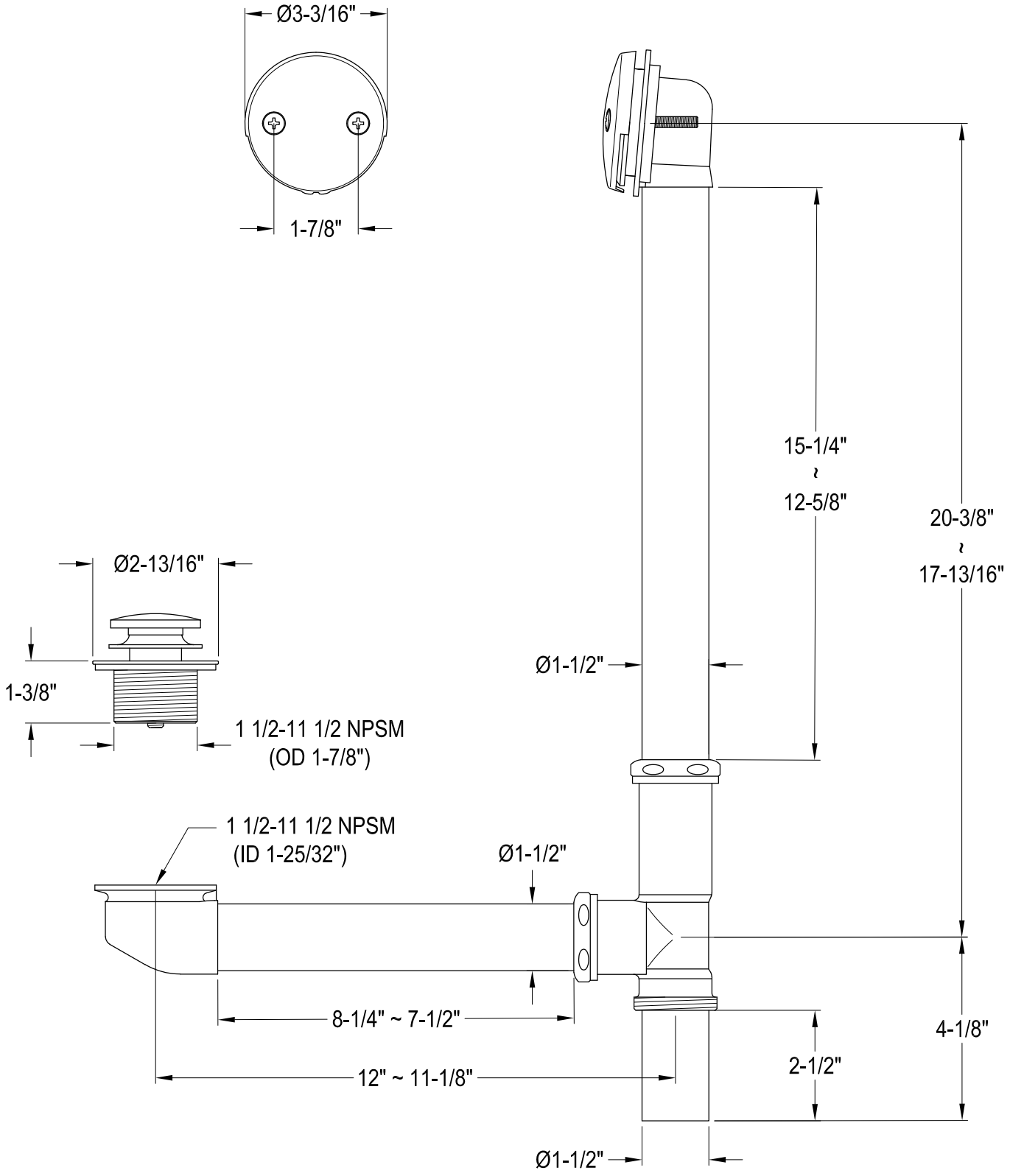
21" Tub Waste & Overflow with Tip Toe Drain, 20 Gauge