ES2341DFL
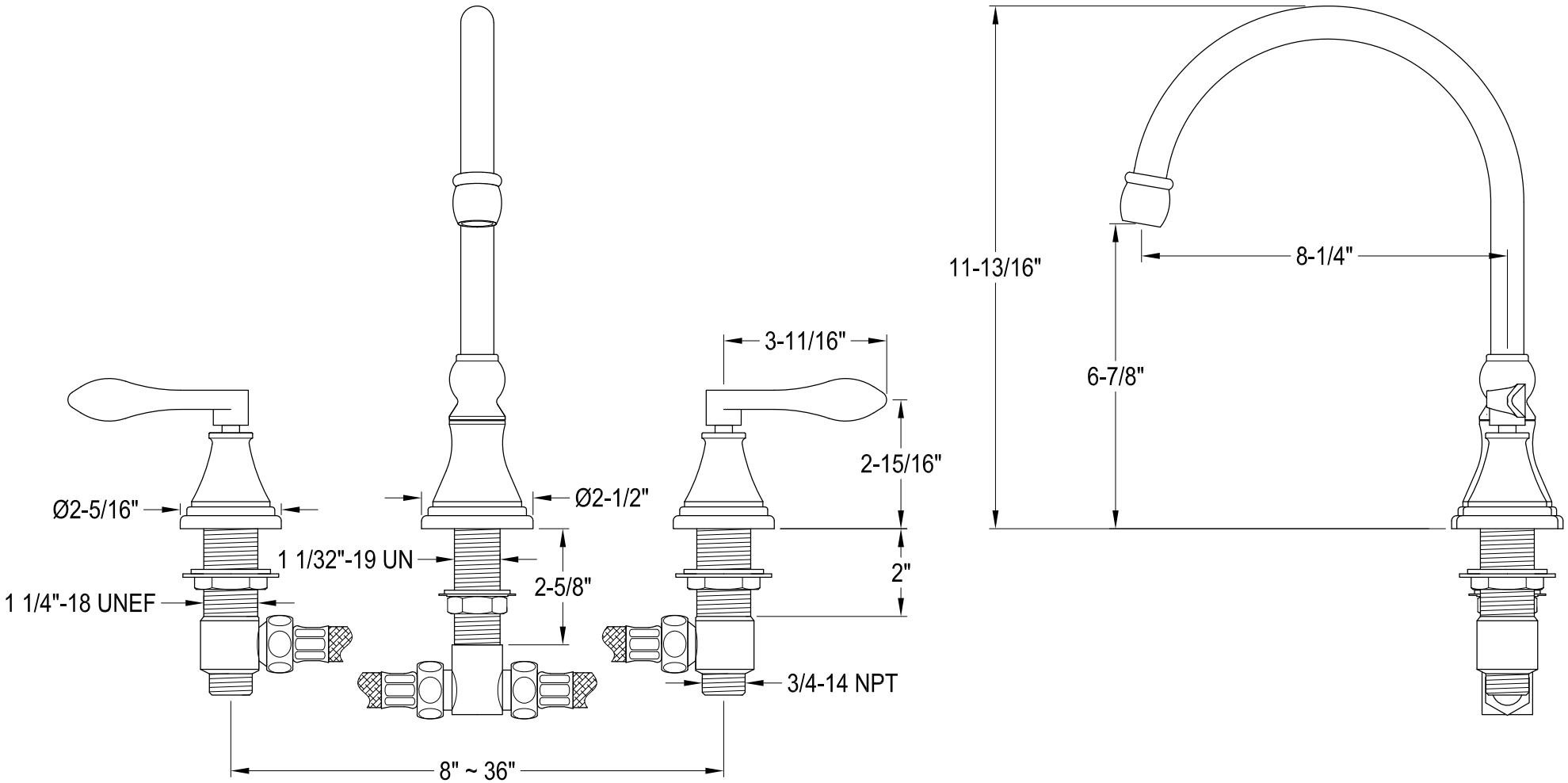
Roman Tub Filler