ES2961,2,4,5,7,8,9
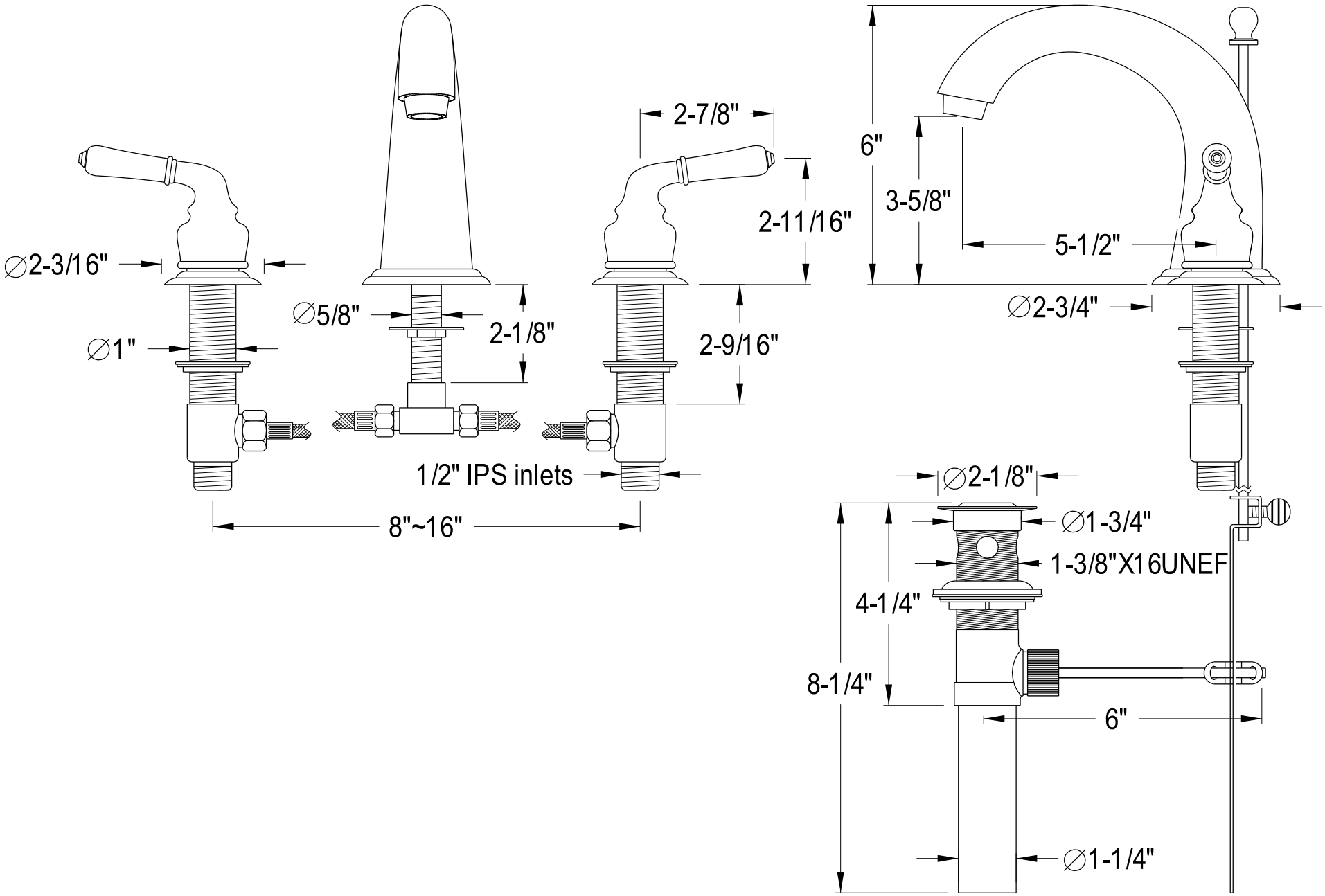
Widespread Lavatory Faucet With Brass Pop-Up