ES3121,2,5,8AX
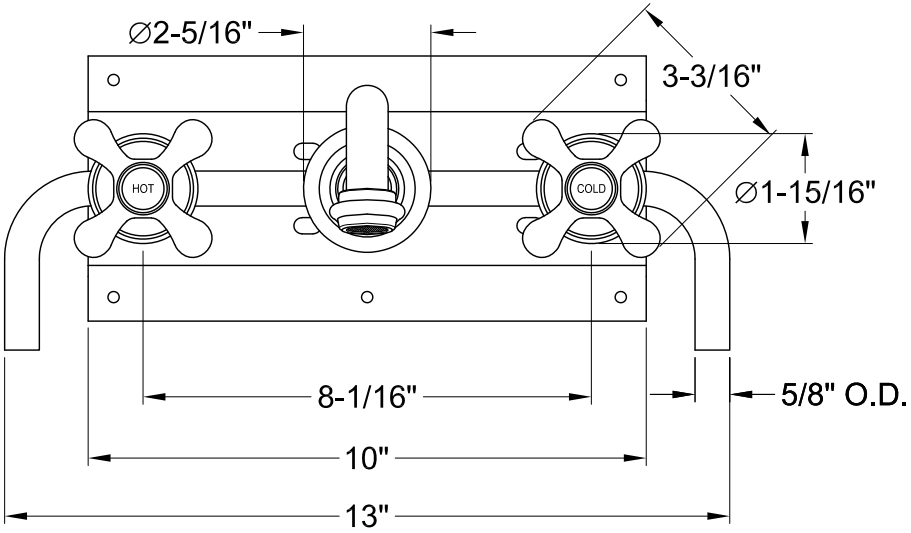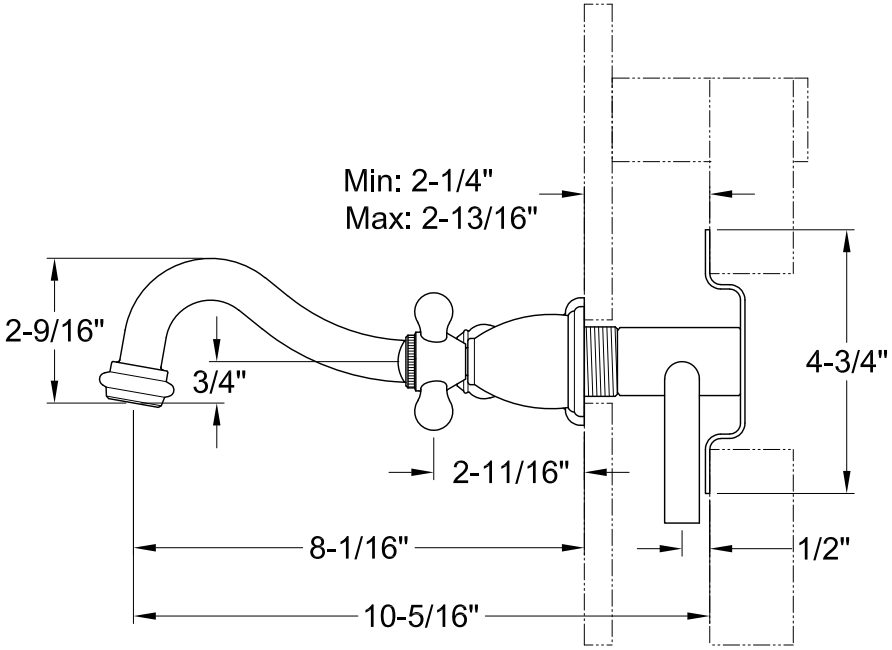
Twin Handles Wall Mount Bathroom Faucet