ES3121,2,5,8NL
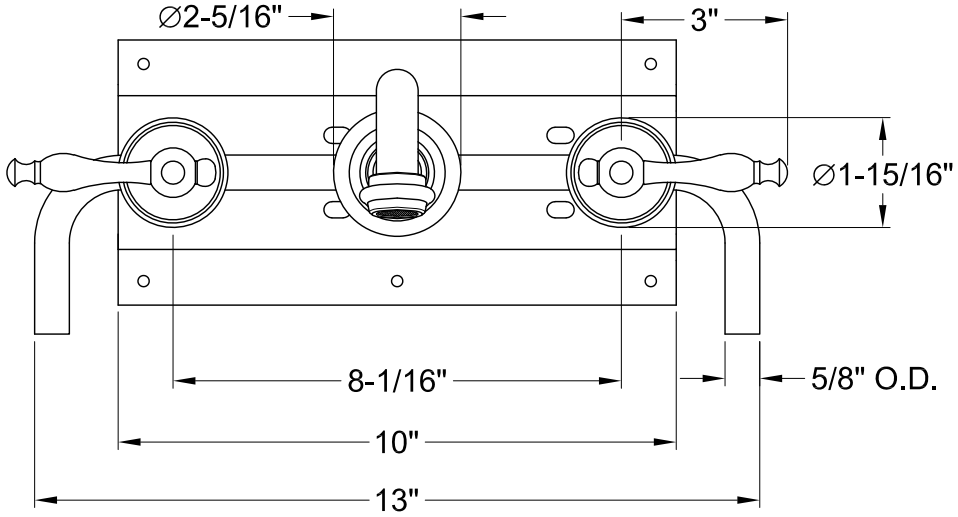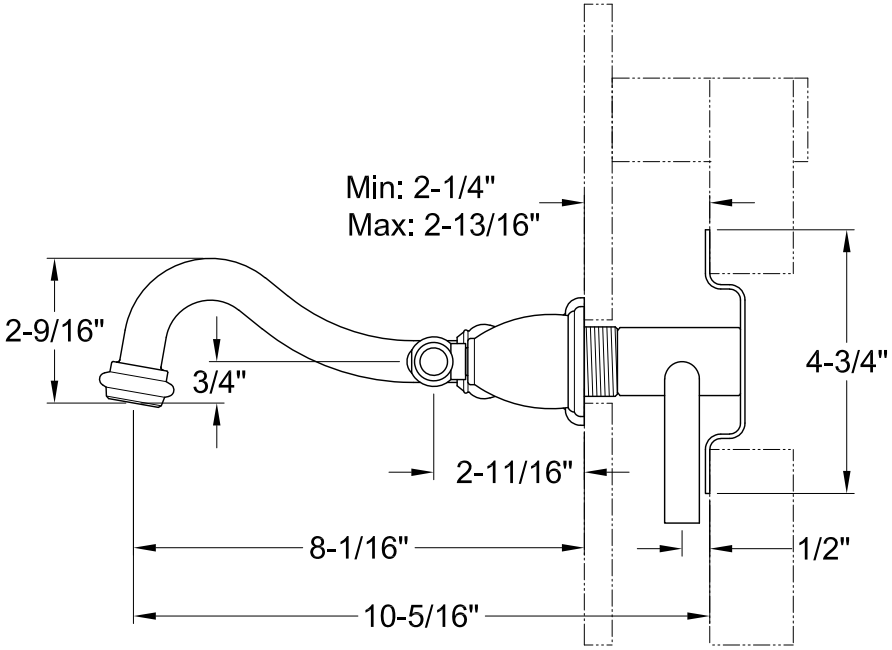
Twin Handles Wall Mount Bathroom Faucet