MODEL#:**ES33525AL**
PRODUCT SPECIFICATION SHEET

Elements of Design

DESCRIPTION:

Roman Tub Filler 5 Pieces With Hand Shower,Pvd

CARTRIDGES (If applicable):

CARTRIDGE TYPE	MODEL #
Hot Cartridge	KSRTP3002HC
Cold Cartridge	KSRPT5002CC
Shared or Single H&C Cartridge	
Diverter (If applicable)	KSRPT5002DC

Note: Please always check with Elements of Design Customer Service for Cartridge Model Number Verification before you order.
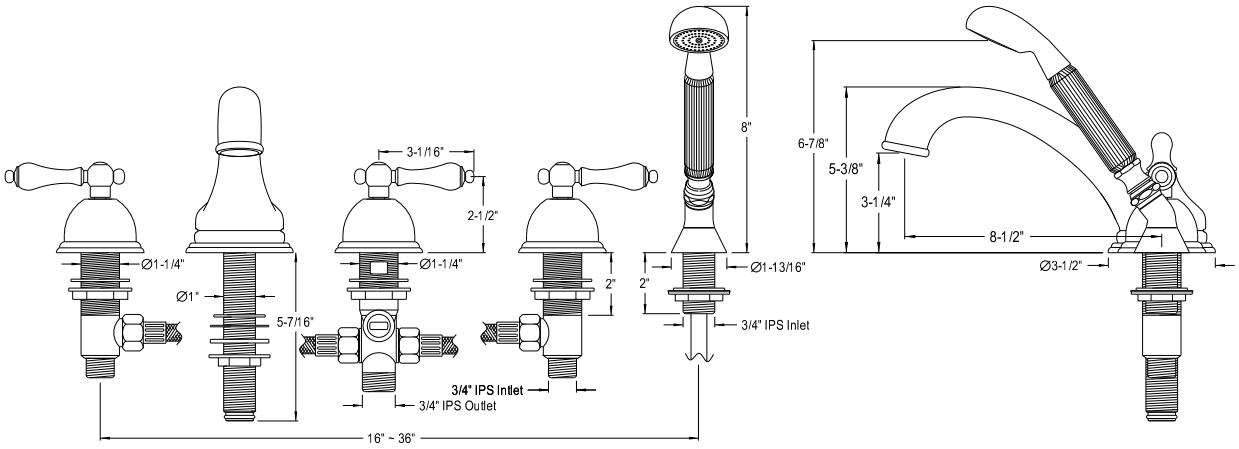
Note: Photo above and Drawing below shows overall style of the product, handle styles may be different to the product model number this specification sheet is refering to