ES4641,2,4,5,7,8,9QL
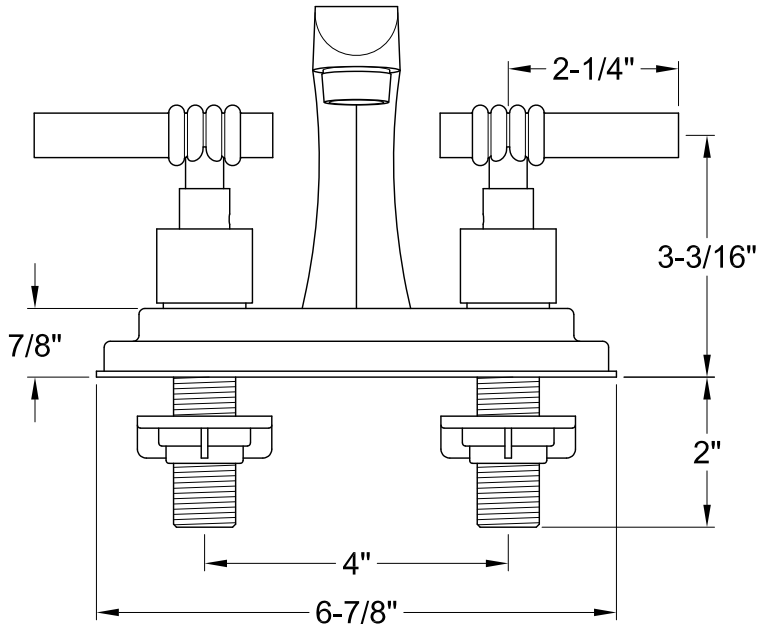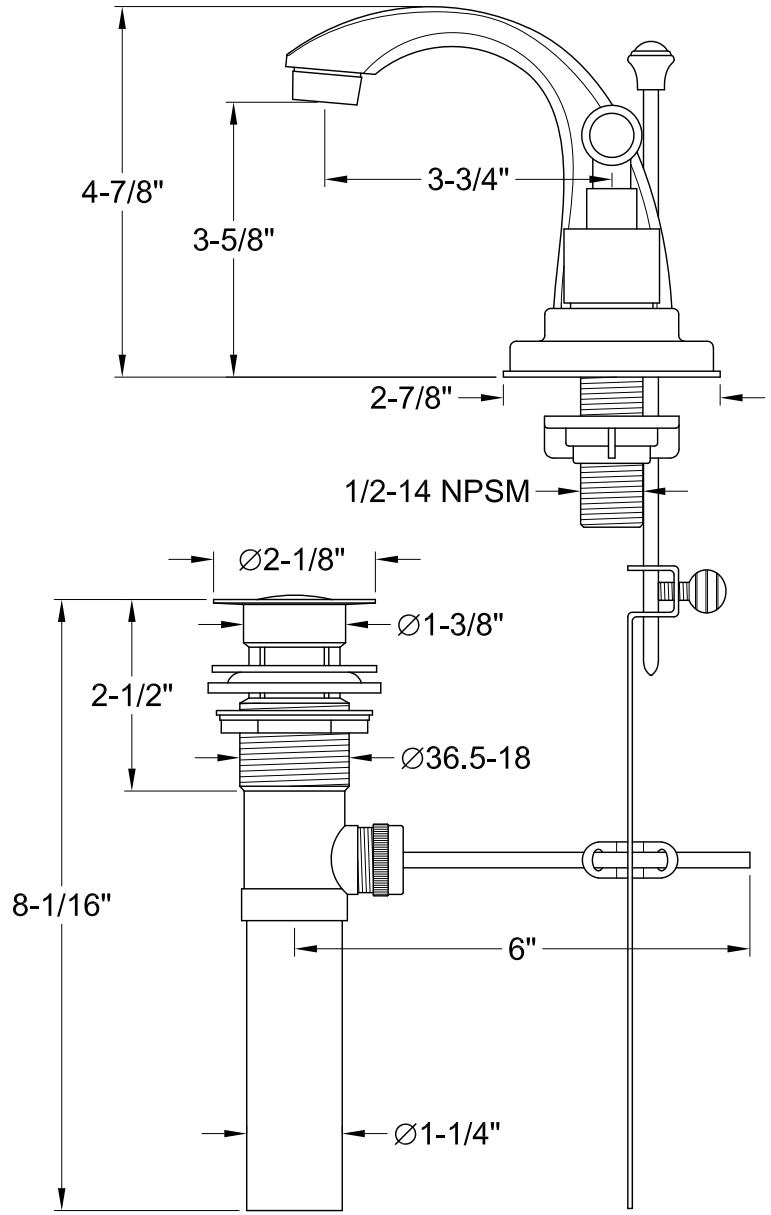
Twin Handles 4" Centerset Lavatory Faucet With Brass Pop-Up