# ES4641,2,5,8CML
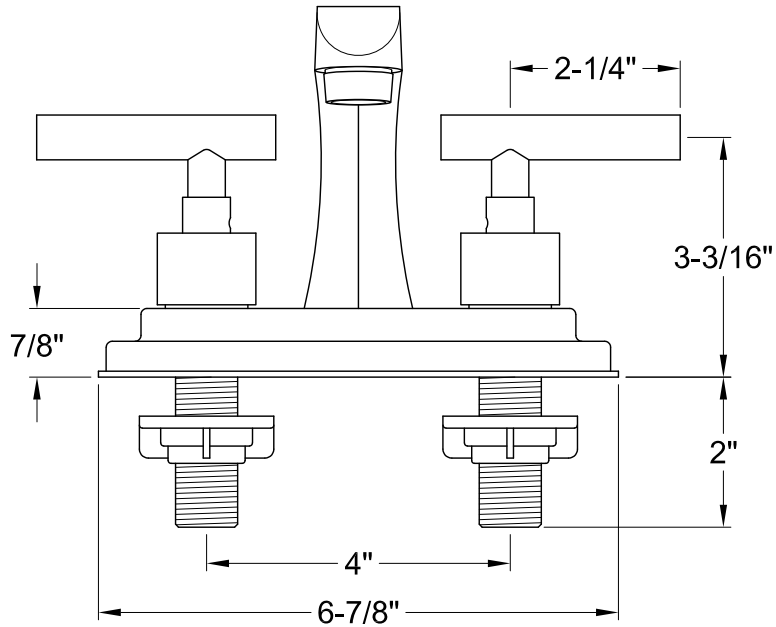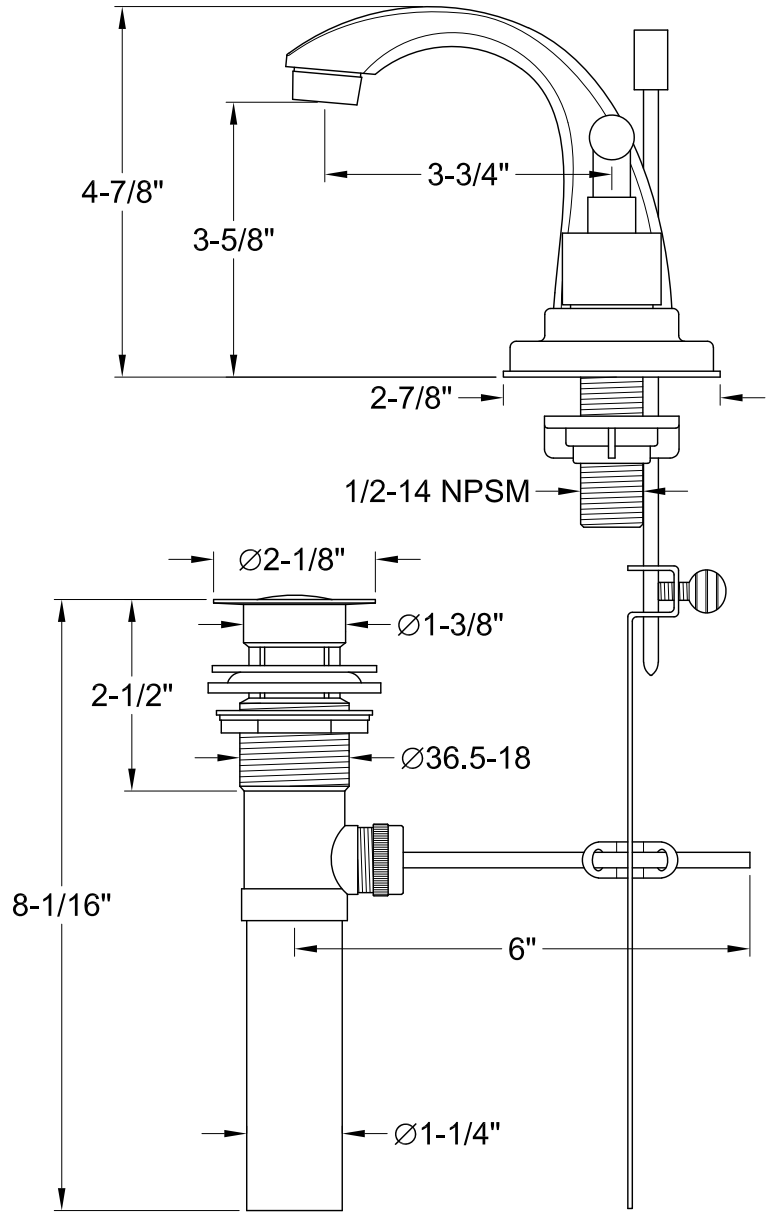
Twin Handles 4" Centerset Lavatory Faucet With Brass Pop-Up