ES7801,5,8TPLBS
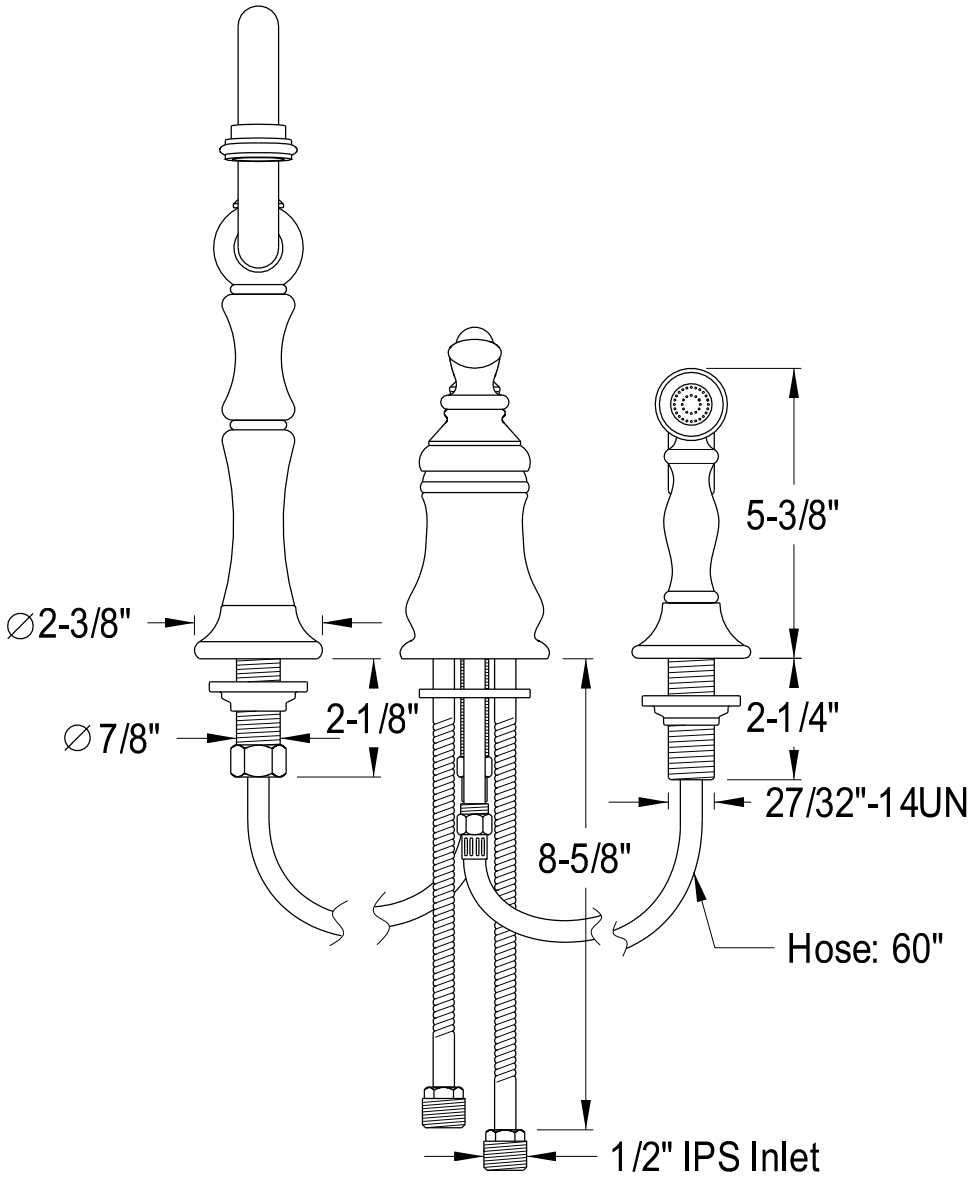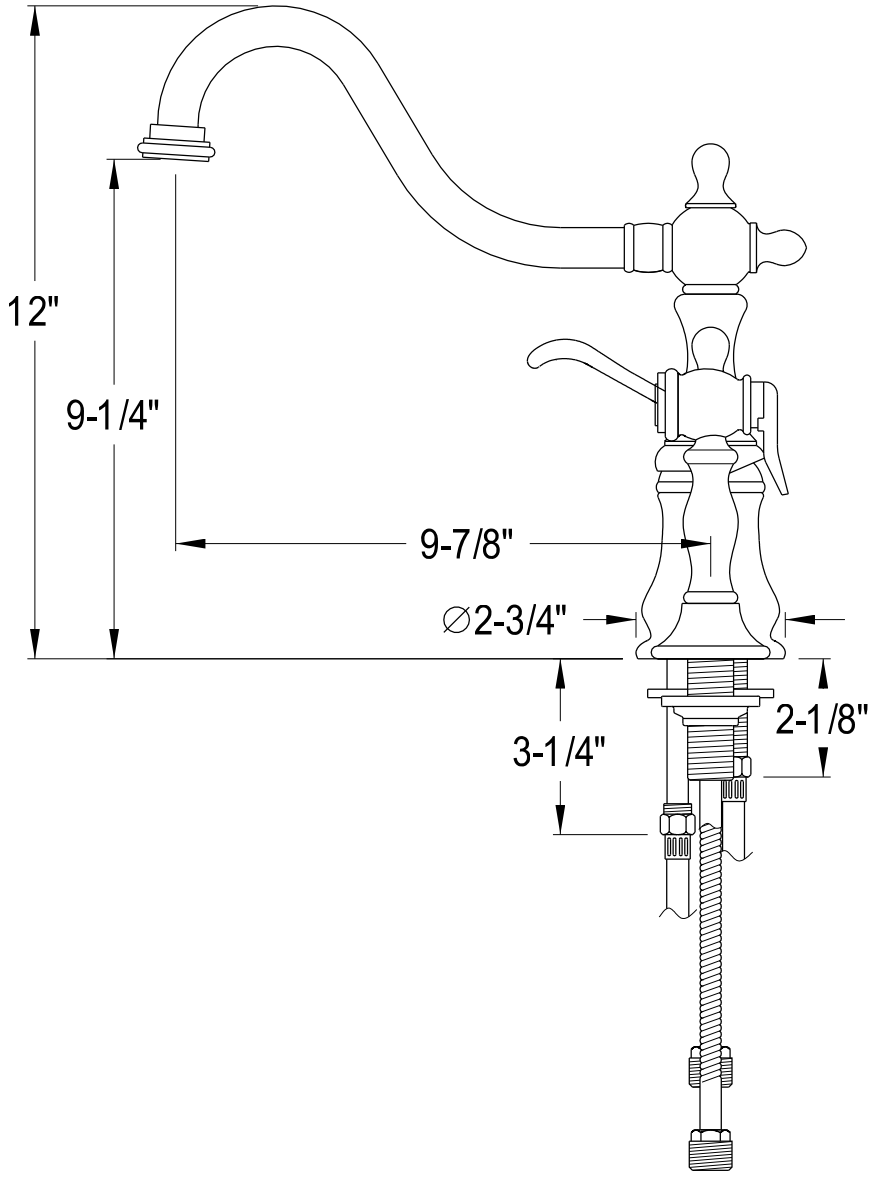
Widespread Kitchen Faucet With Brass Sprayer