ES8951,8DL
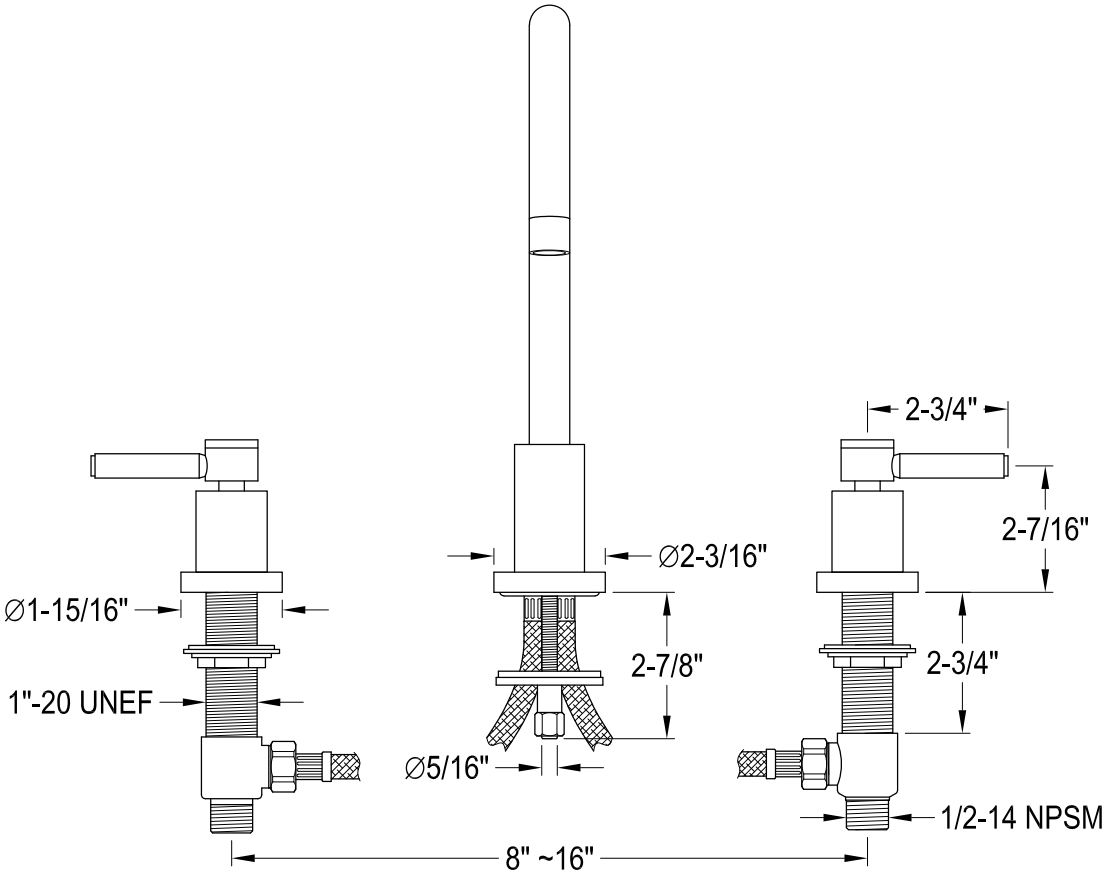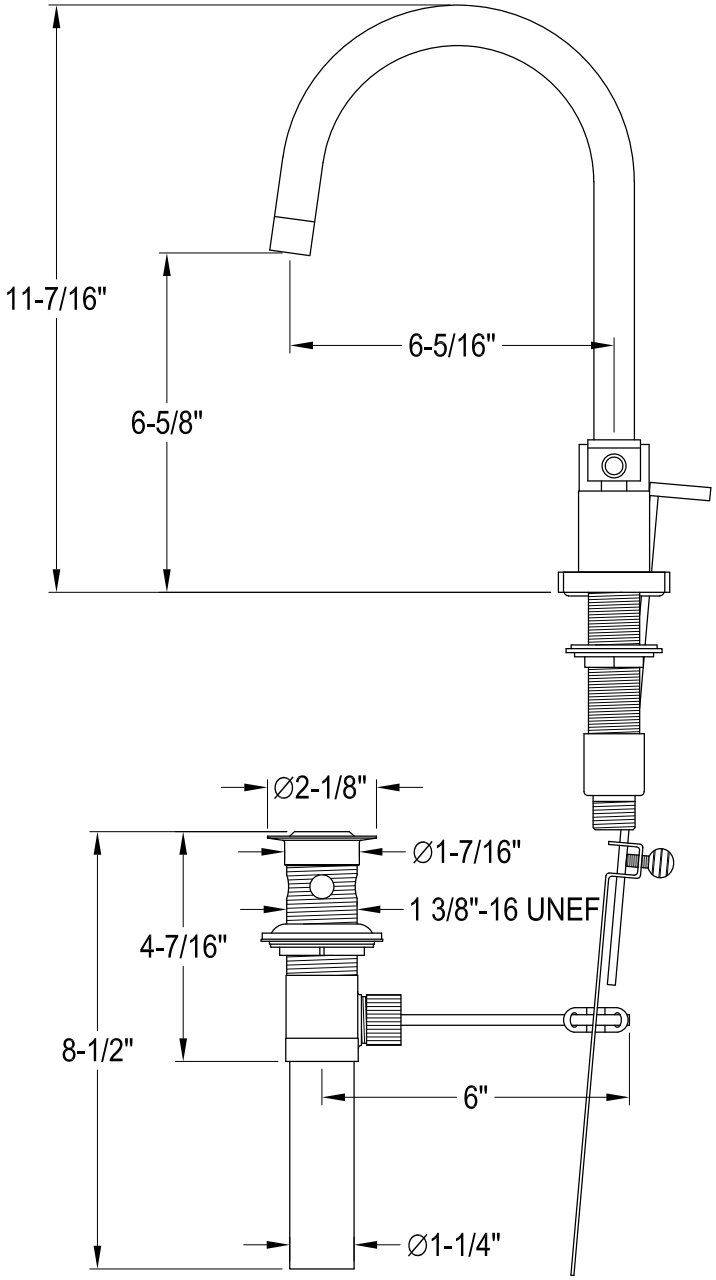
Widespread Lavatory Faucet with Brass Pop-Up